CENTURION®
STANDBY GENERATORS

60 kW

Liquid-Cooled Engine Generator Sets

Standby Power Rating
Model 005603-1 (Steel - Bisque) - 60 kW 60Hz
Model 005609-0 (Aluminum - Gray) - 60 kW 60Hz

INCLUDES:

- Generac Turbocharged/Aftercooled Gaseous Fueled 2.4L Engine
- Two Line LCD Tri-lingual Digital Nexus™ Controller
- Isochronous Electronic Governor
- Sound Attenuated Enclosure
- Closed Coolant Recovery System
- Smart Battery Charger
- UV/Ozone Resistant Hoses
- ±1% Voltage Regulation
- Natural Gas or LP Operation
- 2 Year Limited Warranty
- UL 2200 Listed

c UL us LISTED

GOOD HOUSEKEEPING

QUIET TEST™

Meets EPA Emission Regulations
Not for sale in CA/MA

FEATURES

- **INNOVATIVE DESIGN & PROTOTYPE TESTING** are key components of GENERAC'S success in "IMPROVING POWER BY DESIGN." But it doesn't stop there. Total commitment to component testing, reliability testing, environmental testing, destruction and life testing, plus testing to applicable CSA, NEMA, EGSA, and other standards, allows you to choose GENERAC POWER SYSTEMS with the confidence that these systems will provide superior performance.

- **TEST CRITERIA:**
  - ✓ **PROTOTYPE TESTED**
  - ✓ **SYSTEM TORSIONAL TESTED**
  - ✓ **NEMA MG1-22 EVALUATION**
  - ✓ **MOTOR STARTING ABILITY**

- **SOLID-STATE, FREQUENCY COMPENSATED VOLTAGE REGULATION.** This state-of-the-art power maximizing regulation system is standard on all Generac models. It provides optimized FAST RESPONSE to changing load conditions and MAXIMUM MOTOR STARTING CAPABILITY by electronically torque-matching the surge loads to the engine. An unequalled ±1% voltage regulation.

- **SINGLE SOURCE SERVICE RESPONSE** from Generac's extensive dealer network provides parts and service know-how for the entire unit, from the engine to the smallest electronic component.

- **GENERAC TRANSFER SWITCHES.** Long life and reliability are synonymous with GENERAC POWER SYSTEMS. One reason for this confidence is that the GENERAC product line includes its own transfer systems and controls for total system compatibility.

CENTURION
by Generac Power Systems, Inc.

ISO 9001:2008

Application & Engineering Data 60 kW

GENERATOR SPECIFICATIONS

TYPE	Synchronous
ROTOR INSULATION	Class H
STATOR INSULATION	Class H
TELEPHONE INTERFERENCE FACTOR (TIF)	<50
ALTERNATOR OUTPUT LEADS 3 PHASE	4 wire
BEARINGS	Sealed Ball
COUPLING	Flexible Disc
LOAD CAPACITY (STANDBY RATING)	60 kW
EXCITATION SYSTEM	Direct

VOLTAGE REGULATION

TYPE	Electronic
SENSING	Single Phase
REGULATION	± 1%

GENERATOR FEATURES

Revolving field heavy duty generator
Directly connected to the engine
Operating temperature rise 120 °C above a 40 °C ambient
Insulation is Class H rated at 150 °C rise
All models are fully prototyped tested

ENCLOSURE FEATURES

Galvanized steel weather protective enclosure	Ensures protection against mother nature. Electrostatically applied textured epoxy paint for added durability.
Enclosed critical grade muffler	Quiet, critical grade muffler is mounted inside the unit to prevent injuries.
Small, compact, attractive	Makes for an easy, eye appealing installation.
SAE	Sound attenuated enclosure ensures quiet operation.

ENGINE SPECIFICATIONS

MAKE	Generac
MODEL	In line
CYLINDERS	4
DISPLACEMENT	2.4 Liter, 146 in.^{3}
BORE	3.41
STROKE	3.94
COMPRESSION RATIO	8.5:1
INTAKE AIR SYSTEM	Turbocharged/Aftercooled
VALVE SEATS	Hardened
LIFTER TYPE	Hydraulic

GOVERNOR SPECIFICATIONS

TYPE	Electronic
FREQUENCY REGULATION	Isochronous
STEADY STATE REGULATION	± 0.25%
ADJUSTMENTS FOR	
Speed	Yes
Droop	Yes

ENGINE LUBRICATION SYSTEM

OIL PUMP	Gear
OIL FILTER	Full flow spin-on cartridge
CRANKCASE CAPACITY	4 Quarts

ENGINE COOLING SYSTEM

TYPE	Closed
WATER PUMP	Belt driven
FAN SPEED	2100
FAN DIAMETER	22 inches
FAN MODE	Puller

FUEL SYSTEM

FUEL TYPE	Natural gas, propane vapor
CARBURETOR	Down Draft
SECONDARY FUEL REGULATOR	Standard
FUEL SHUT OFF SOLENOID	Standard
OPERATING FUEL PRESSURE	5” - 14” H_2O

ELECTRICAL SYSTEM

BATTERY CHARGE ALTERNATOR	12V 30 Amp
STATIC BATTERY CHARGER	2 Amp
RECOMMENDED BATTERY	Group 26, 525CCA
SYSTEM VOLTAGE	12 Volts

Rating definitions - Standby: Applicable for supplying emergency power for the duration of the utility power outage. No overload capability is available for this rating. (All ratings in accordance with BS5514, ISO3046 and DIN6271). (All ratings in accordance with BS5514, ISO3046, ISO8528, SAE J1349 and DIN6271).

Centurion® Standby Generator - 60 kW

CENTURION by Generac Power Systems, Inc.

OPERATING DATA			
KW RATING (LP/NG)	60/60		
ENGINE SIZE	2.4 Liter 4 cyl. inline		
GENERATOR OUTPUT VOLTAGE/KW - 60Hz	**KW**	**AMP**	**CB Size**
120/240V, 1-phase, 1.0 pf	60	250	300
120/208V, 3-phase, 0.8 pf	60	208	250
120/240V, 3-phase, 0.8 pf	60	180	200
277/480V, 3-phase, 0.8 pf	60	90	100

ENGINE FUEL CONSUMPTION (Natural Gas) (Propane)	**Natural Gas**	**Propane**	
	(ft^3/hr.)	(gal/hr.)	cu ft/hr
Exercise cycle	123	1.34	49.3
25% of rated load	267	2.7	101
50% of rated load	483	5.0	183
75% of rated load	672	7.0	255
100% of rated load*	862	9.0	327
For Btu content, multiply ft^3/hr x 2520 (LP) or ft^3/hr x 1000 (NG)			

ENGINE COOLING		
Air flow (inlet air including alternator and combustion air)	ft^3/min.	3,280
System coolant capacity	US gal.	2.5
Heat rejection to coolant	BTU/hr.	270,000
Max. operating air temp. on radiator	°C (°F)	60 (150)
Max. ambient temperature	°C (°F)	50 (140)
COMBUSTION AIR REQUIREMENTS		
Flow at rated power 60 Hz	cfm	180
SOUND EMISSIONS IN DBA		
Exercising at 7 meters		65
Normal operation at 7 meters		72
EXHAUST		
Exhaust flow at rated output 60 Hz	cfm	494
Exhaust temp. at muffler outlet	°F	1,050
ENGINE PARAMETERS		
Rated synchronous RPM	60 Hz	3600
POWER ADJUSTMENT FOR AMBIENT CONDITIONS		
Temperature Deration		
3% for every 10 °C above - °C		25
1.65% for every 10 °F above - °F		77
Altitude Deration		
1% for every 100 m above - m		915
3% for every 1000 ft. above - ft.		3000

* Refer to "Emissions Data Sheets" for maximum fuel flow for EPA and SCAQMD permitting purposes.

RATING: All three phases units are rated at 0.8 power factor. All single phase units are rated at 1.0 power factor. STANDBY RATING: Standby ratings apply to installations served by a reliable utility source. The standby rating is applicable to varying loads for the duration of a power outage. There is no overload capability for this rating. Ratings are in accordance with ISO-3046-1. Design and specifications are subject to change without notice.
KW rating is based on LPG Fuel and may derate with natural gas.

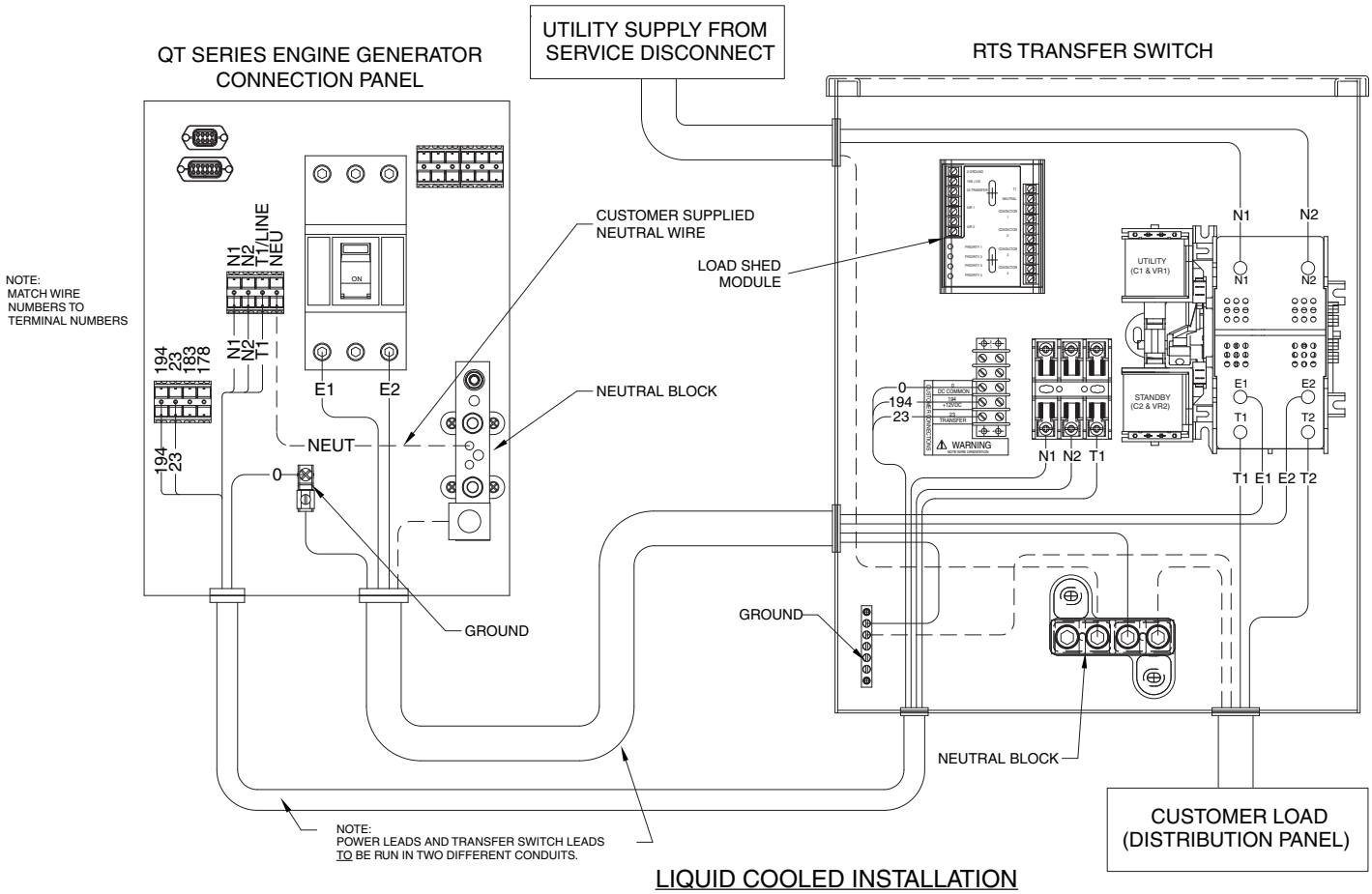

LIQUID COOLED INSTALLATION

NEXUS™ CONTROL FEATURES

2-Line Plain Text LCD Display	Simple user interface for ease of operation
Mode Switch -Auto	Automatic Start on Utility failure. 7 day exerciser
-Off	Stops unit. Power is removed. Control and charger still operate.
-Manual/Test (start)	Start with starter control, unit stays on. If utility fails, transfer to load takes place.
Programmable start delay between 10-30 seconds	Standard
Engine Start Sequence	Cyclic cranking: 16 sec. on, 7 rest (90 sec. maximum duration)
Engine Warm-up	5 seconds
Engine Cool-Down	1 minute
Starter Lock-out	Starter cannot re-engage until 5 sec. after engine has stopped.
Smart Battery Charger	Standard
Automatic Voltage Regulation with Over and Under Voltage Protection	Standard
Automatic Low Oil Pressure Shutdown	Standard
Overspeed Shutdown	Standard, 72Hz
High Temperature Shutdown	Standard
Overcrank Protection	Standard
Safety Fused	Standard
Failure to Transfer Protection	Standard
Low Battery Protection	Standard
50 Event Run Log	Standard
Future Set Capable Exerciser	Standard
Incorrect Wiring Protection	Standard
Internal Fault Protection	Standard
Common External Fault Capability	Standard
Governor Failure Protection	Standard

***Single and three phase connections may vary , refer to the owner's manual for specific connection information.**

INSTALLATION LAYOUT

60 kW

NOTES:

1) MINIMUM RECOMMENDED CONCRETE PAD SIZE: 1155 (45 1/2") WIDE X 2255 (88 7/8") LONG. REFERENCE INSTALLATION GUIDE SUPPLIED WITH UNIT FOR CONCRETE PAD GUIDELINES.
2) ALLOW SUFFICIENT ROOM ON ALL SIDES OF THE GENERATOR FOR MAINTENANCE AND SERVICING. THIS UNIT MUST BE INSTALLED IN ACCORDANCE WITH CURRENT APPLICABLE NFPA 37 AND NFPA 70 STANDARDS AS WELL AS ANY OTHER FEDERAL, STATE AND LOCAL CODES FOR MINIMUM DISTANCES FROM OTHER STRUCTURES.
3) CIRCUIT BREAKER INFORMATION: SEE SPECIFICATION SHEET WITHIN OWNERS MANUAL
4) INSIDE STUB-UP AREA FOR AC LOAD LEAD CONDUIT CONNECTION, NEUTRAL CONNECTION, BATTERY CHARGER 120 VOLT AC (0.5 AMP MAX.) CONNECTION, AND ACCESS TO TRANSFER SWITCH CONTROL WIRES. REMOVE FRONT COVER FOR ACCESS.

4A) FIELD CUT HOLE IS ONLY REQUIRED FOR MOUNTING OF GENERATOR ON AN EXISTING PAD.

5) REFERENCE OWNERS MANUAL FOR LIFTING WARNINGS.
6) REMOVE EITHER LEFT OR RIGHT HAND SIDE PANEL TO ACCESS EXHAUST MUFFLER AND FAN BELT.

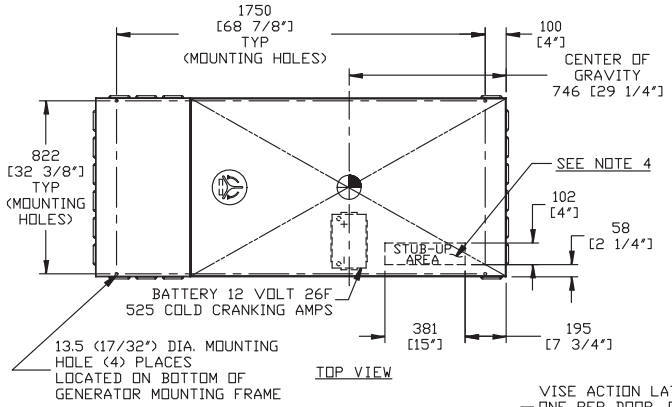

SERVICE ITEM ACCESSIBILITY CHART

SERVICE ITEM	2.4L
OIL FILL CAP	THRU RIGHT DOOR
OIL DIP STICK	THRU RIGHT DOOR
OIL FILTER	THRU LEFT DOOR
OIL DRAIN HOSE	THRU RIGHT DOOR
RADIATOR DRAIN HOSE	THRU LEFT DOOR
AIR CLEANER ELEMENT	THRU LEFT DOOR
SPARK PLUGS	THRU LEFT DOOR
MUFFLER	SEE NOTE 6
FAN BELT	SEE NOTE 6
BATTERY	THRU LEFT DOOR

REFERENCE OWNERS MANUAL FOR PERIODIC REPLACEMENT PART LISTINGS

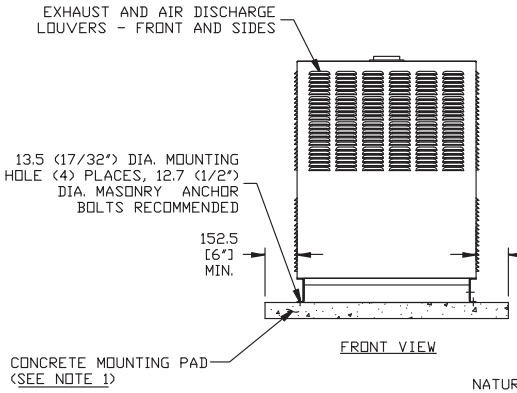

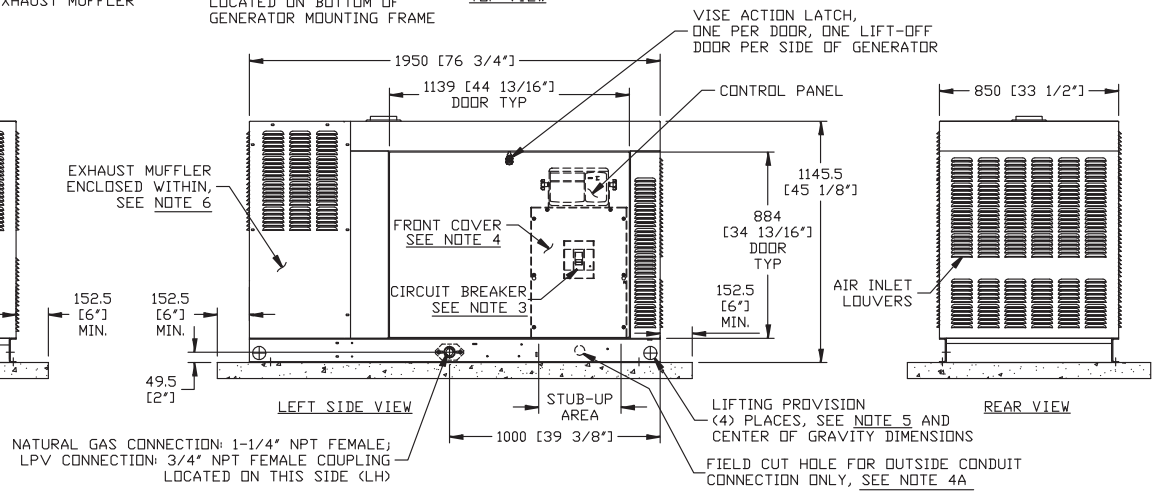

WEIGHT DATA

ENCLOSURE MATERIAL	WEIGHT (GENSET ONLY) KG [LBS]	WEIGHT (WOODEN SHIPPING CRATE/SKID) KG [LBS]	SHIPPING WEIGHT (SKID AND GENSET) KG [LBS]
STEEL	654 [1441]	44 [98]	699 [1539]
ALUMINUM	600 [1324]	44 [98]	645 [1422]

Model #	Product	Description
5630	Cold Weather Kit	If the temperature regularly falls below 32° F, install a cold weather kit to maintain optimal battery temperature. Kit consists of battery warmer with thermostat built into the wrap.
5616	Extreme Cold Weather Kit	Recommended where the temperature regularly falls below 32° F for extended periods of time. For liquid cooled units only.
5651	Base Plug Kit	Add base plugs to the base of the generator to keep out debris.
5704	Paint Kit	Medium Grey Kit
5984	Scheduled Maintenance Kit	The Liquid-Cooled Scheduled Maintenance Kits offer all the hardware necessary to perform a complete maintenance on Generac liquidcooled generators.
5928	Nexus Wireless Remote	Completely wireless and battery powered, Generac's Nexus wireless remote monitor provides you with instant status information without ever leaving the house.
5951	Advanced Nexus Wireless Remote	Remotely control generator functions with the advanced model's LCD display. In addition to remote testing of the generator, set the excercise cycle and maintenance interval reminders
5937	DLM Load Control Module (50 Amps)	DLM Modules are used in conjunction with the Nexus Smart Switch to increase its load management capabilities. It gives the Nexus Smart Switch additional load management flexibility not found in any other transfer switch.

©2011 Generac Power Systems, Inc. All rights reserved. All specifications are subject to change without notice. Bulletin 0187920SBY-E / Printed in U.S.A. 10/20/11